JDB 黄铜基标准轴承
JDB Solid Lubricating Bearings

www.huihebearing.com

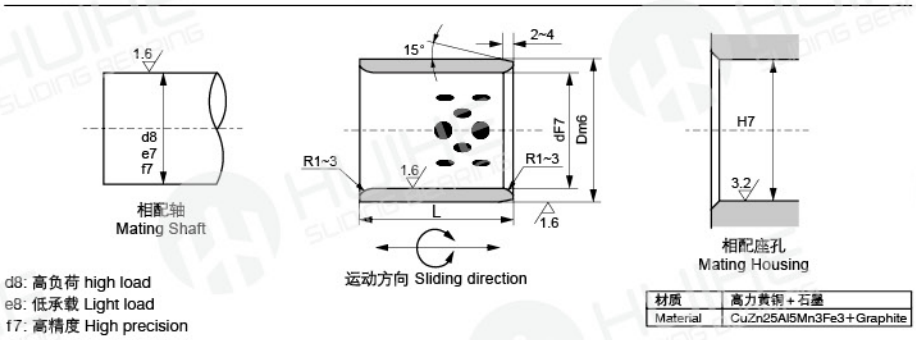

d8: 高负荷 high load
e8: 低承载 Light load
f7: 高精度 High precision

材质	高力黄铜+石墨
Material	CuZn25Al5Mn3Fe3+Graphite

d	公差 (F7)	D	公差 (m6)	L -0.10 -0.30																			
				8	10	12	15	20	25	30	35	40	50	60	70	80	90	100	120	140	160	180	200
8	+0.028 +0.013	12	+0.018 +0.007	●	●	●	◐																
10		14		●	●	●	◐	◐															
12	+0.034 +0.016	18		●	●	●	◐	◐	●														
14		20	+0.021 +0.008		●	●	◐	◐	●	●													
16		22			●	●	●	●	●	●	●	●											
20	+0.041 +0.020	28				●	●	●	●	●	●	●											
20		30				●	●	●	●	●	●	●											
25		33	+0.025 +0.009				●	●	●	●	●	●	◐										
25		35					●	◐	◐	●	●	●	●										
30		38						◐	●	●	●	●	●										
30		40						◐	●	●	●	●	●										
35		45							●	●	●	●	●	●									
40		50							●	●	●	●	●	◐	◐								
40	+0.050 +0.025	55	+0.030 +0.011						●	●	●	●	◐	◐	●	◐							
45		55							●	◐	◐	●	◐	◐	●	●							
45		56							●	◐	◐	●	◐	●	●	●							
45		60							●	◐	●	●	●	●	●	●							
50		60							●	●	◐	●	●	●	●	●							
50		65							●	●	●	●	●	●	●	◐							
55	+0.060 +0.030	70	+0.035 +0.013							●	●	●	●	●	●	◐	◐						
60		75								●	●	●	●	●	●	●	◐						
65		80									●	●	●	●	●	◐	●	●					
70		85									◐	◐	◐	●	●	●	●	●					
70		90									●	●	◐	●	●	●	●	●					
75		90									◐	●	●	●	●	●	●	●	●				
75		95									●	●	●	●	●	●	●	●	●				
80		100										●	●	●	●	●	◐	◐	●	●			
85	+0.071 +0.036	100	+0.040 +0.015									●	●	◐	●	◐	◐	●	●	●			
90		110										●	◐	◐	●	◐	◐	●	●	●			
100		120											◐	◐	◐	◐	●	●	●	●	●		
110		130											◐	◐	●	●	●	●	●	●	●		
120		140												◐	●	●	●	●	●	●	●		
130	+0.083 +0.043	150												●	●	●	●	●	◐	◐	●		
140		160													●	●	●	●	◐	◐	●		
150		170													●	●	●	●	◐	◐	●		
160		180													●	●	●	●	●	◐	●	●	
170		190	+0.046 +0.017													◐	●	●	●	●	●	●	
180		200															●	●	●	●	●	●	●
190	+0.096 +0.050	210															●	●	●	●	●	●	●

How to order: Part No. d D L
订单方式: JDB 08 12 08